Horizontal GPC Cyclone

FEATURES

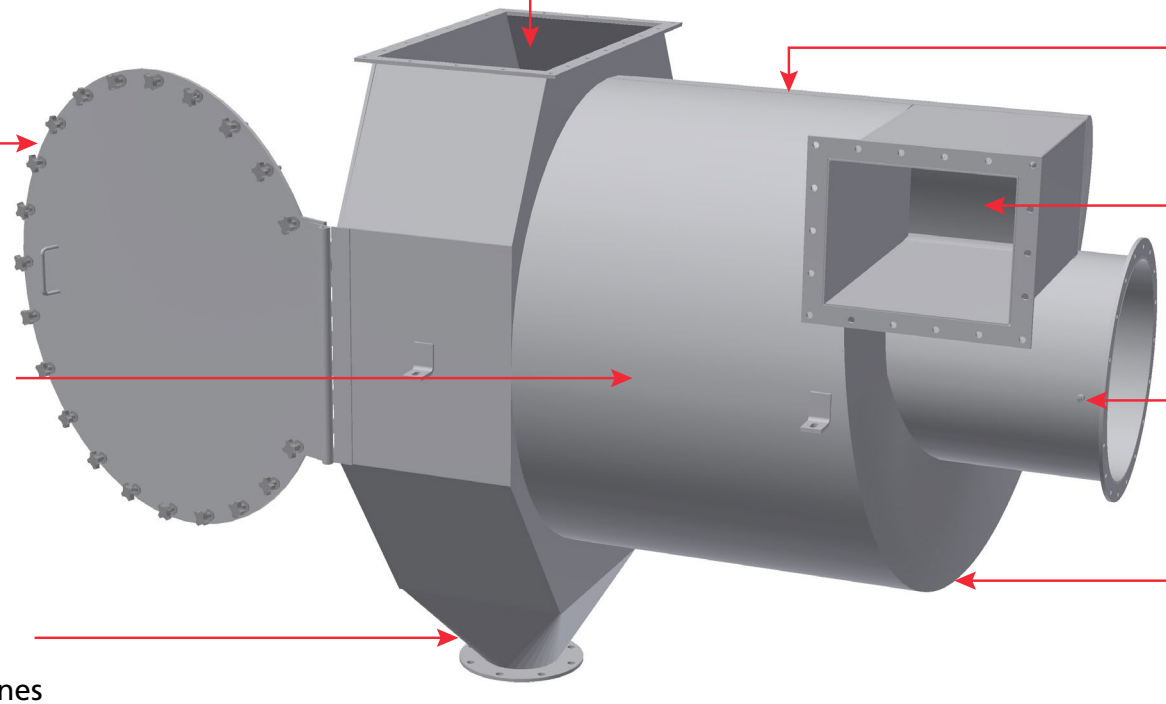

Optional explosion vents located out of airstream

Horizontal design for low profile

High velocity inlet for higher dust removal rate

Taps for measuring differential pressure

Spiral inlet for efficient air distribution

Removable or hinged back door for easy cleaning

Ground plate to keep cyclone compact and prevent dust re-entrapment

Isolated hopper prevents higher erosion seen in traditional cyclones

Aerodyne® ENVIRONMENTAL

17387 Munn Road • Chagrin Falls, OH 44023
(440) 543-7400 • FAX: (440) 543-7404
www.DustCollectorHQ.com